Rolife

INSTRUCTION

Sunset Isle

• TGB18

Scan the QR code or go to Community.robotime.com to discover DIY ideas, quick tips & WIN free kits

SUNSET ISLE
OPEN

Pictures for reference only. Please subject to our existing products.

Assembly Tips

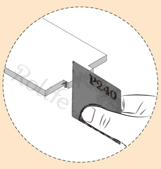

Polish the edges with sandpaper if there are burrs on pieces or it`s hard to insert.

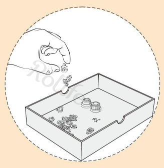

Put small parts into the box to prevent loss.

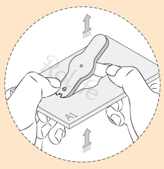

Remove the part by pressing its back to reduce burrs.

1

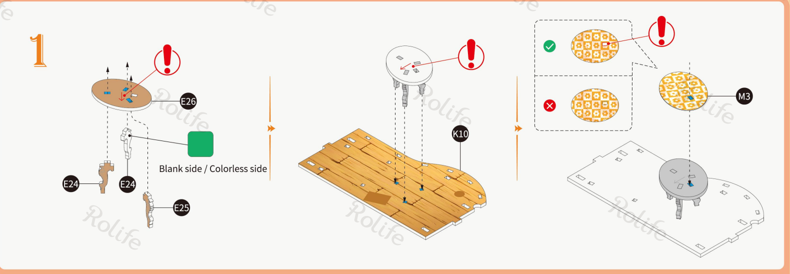
E26
E24
E24
E25
Blank side / Colorless side
K10
M3

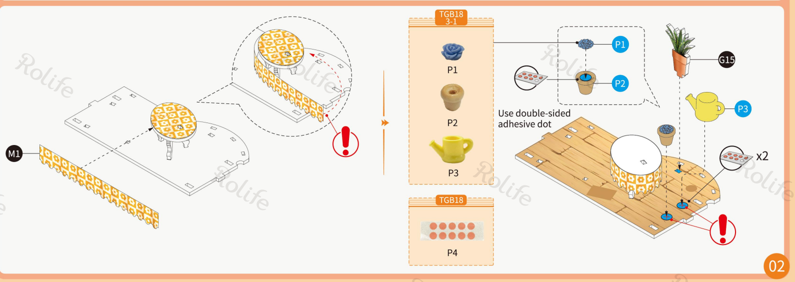
M1
TGB18 3-1
P1
P2
P3
TGB18
P4
P1
P2
G15
P3
Use double-sided adhesive dot
x2

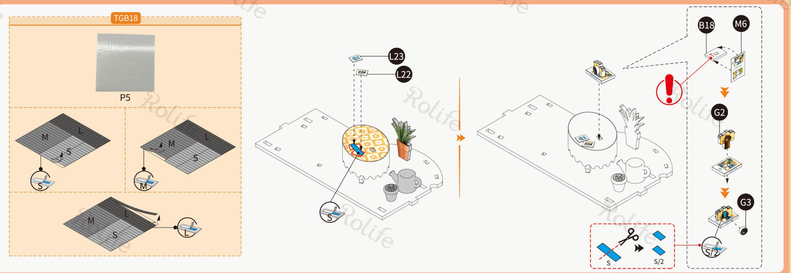
TGB18
P5
M
L
S
S
M
L
S
M
M
L
S
L
L23
L22
S
B18
M6
G2
G3
S
S/2
S/2

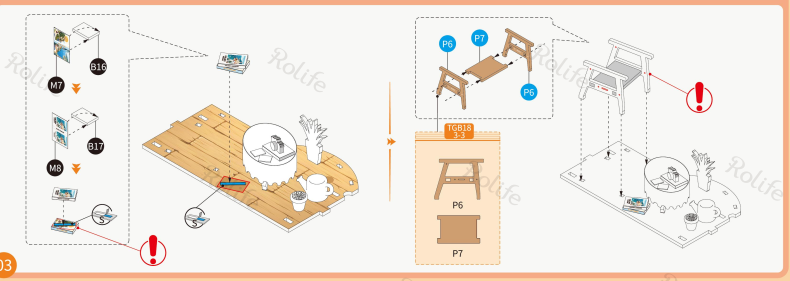
B16
M7
B17
M8
S
S
P6
P7
P6
TGB18 3-3
P6
P7

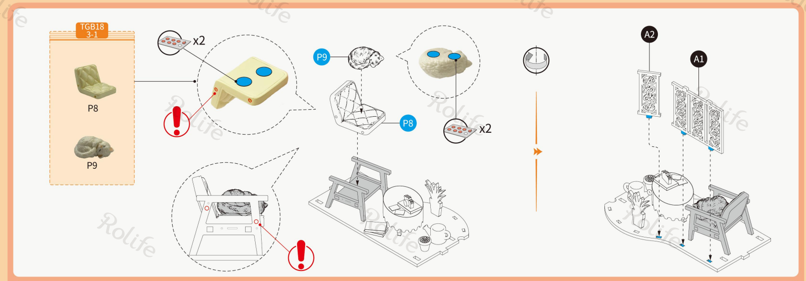
TGB18 3-1
P8
P9
x2
P9
P8
x2
A2
A1

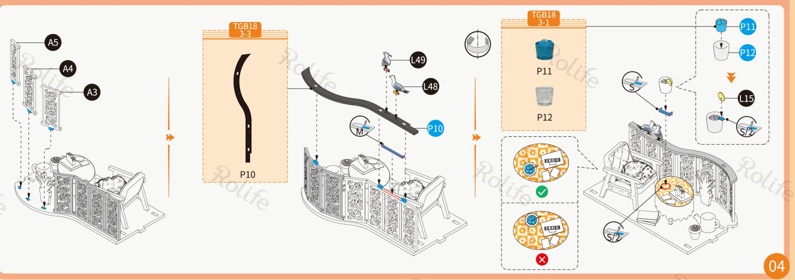
A5
A4
A3
TGB18 3-3
P10
L49
L48
M
P10
TGB18 3-1
P11
P12
P11
P12
L15
S
S/2
S/2

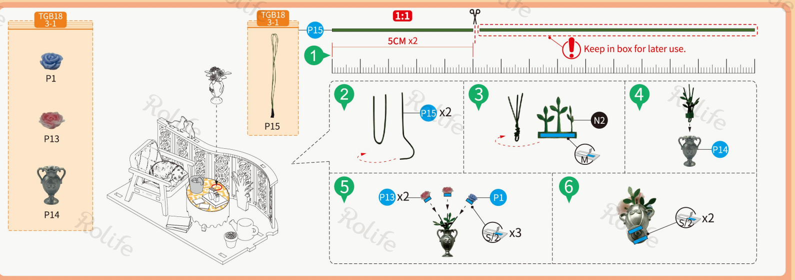
TGB18 3-1
P1
P13
P14
TGB18 3-1
P15
P15
1:1
5CM x2
1
2
P15 x2
3
N2
M
4
P14
5
P13 x2
P1
S/2 x3
6
S/2 x2

Keep in box for later use.

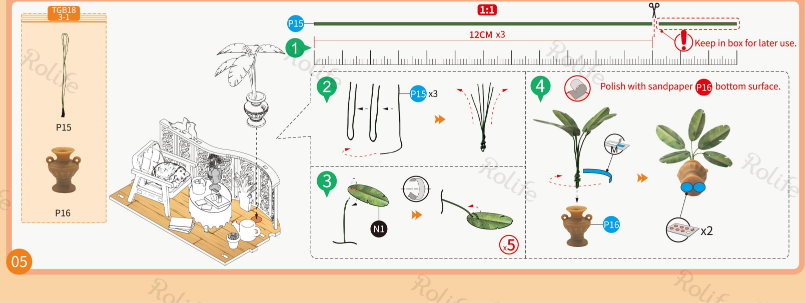
TGB18
3-1
P15
P16
P15
1:1
12CM x3
1
Keep in box for later use.
2
P15 x3
4
Polish with sandpaper P16 bottom surface.
M
3
N1
x5
P16
x2
05

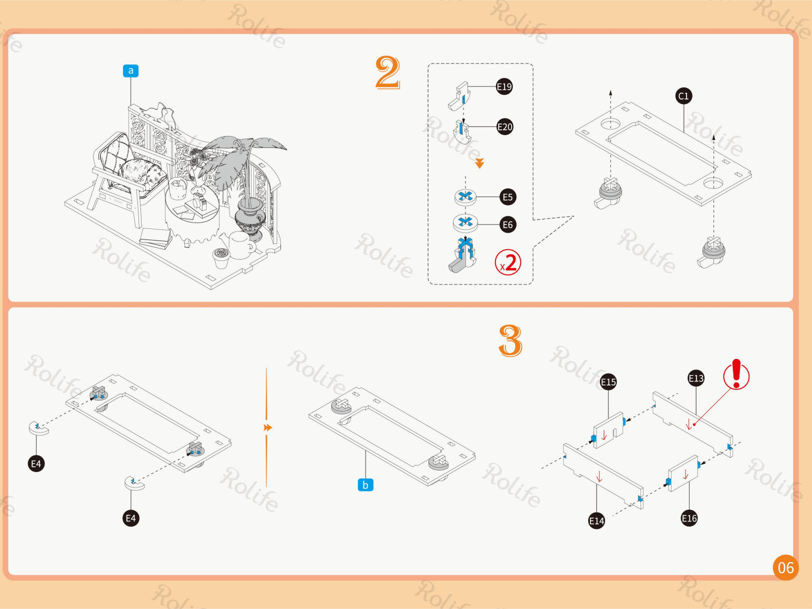
a
2
E19
E20
E5
E6
x2
C1
3
E4
E4
b
E15
E13
E14
E16
06

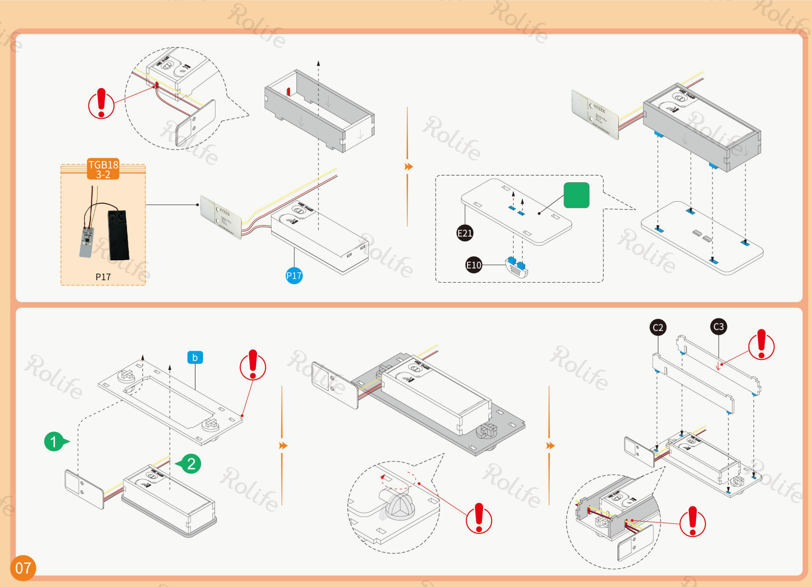
TGB18
3-2
P17
P17
E21
E10
b
1
2
C2
C3
07

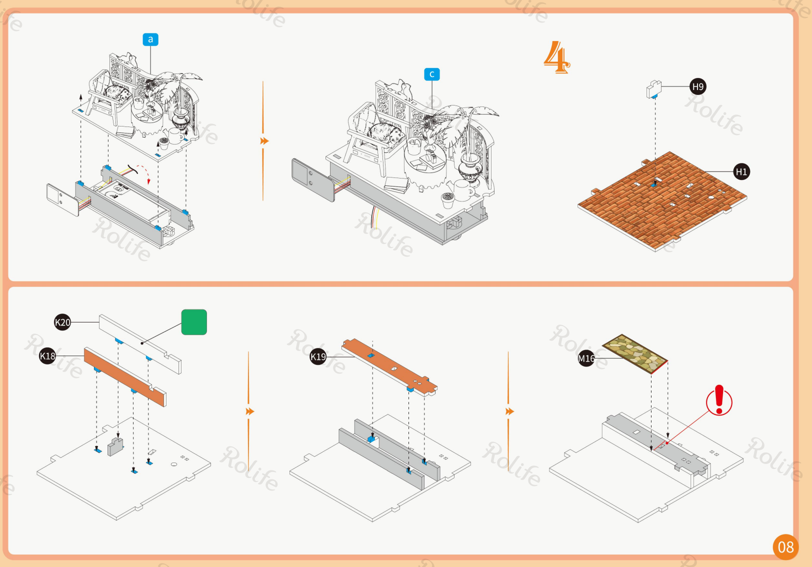
a
c
4
H9
H1
K20
K18
K19
M16
08

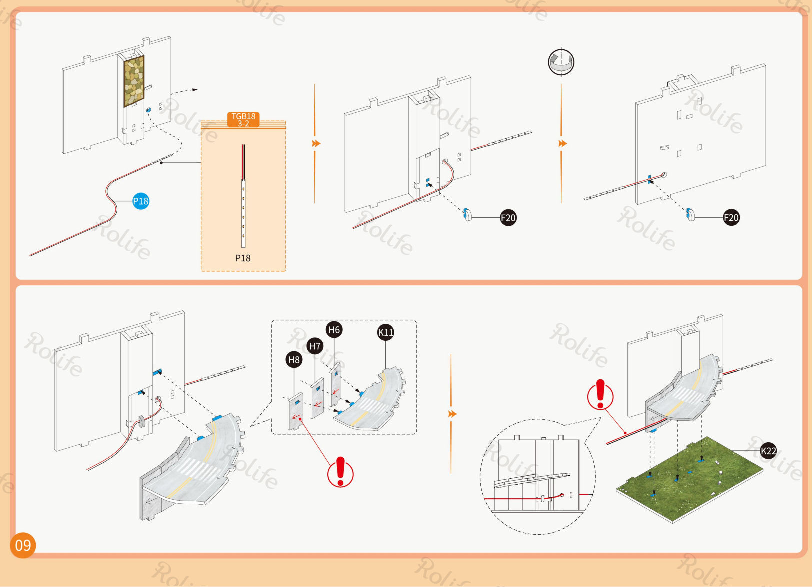
TGB18
3-2
P18
P18
F20
F20
H6
H7
H8
K11
K22
09

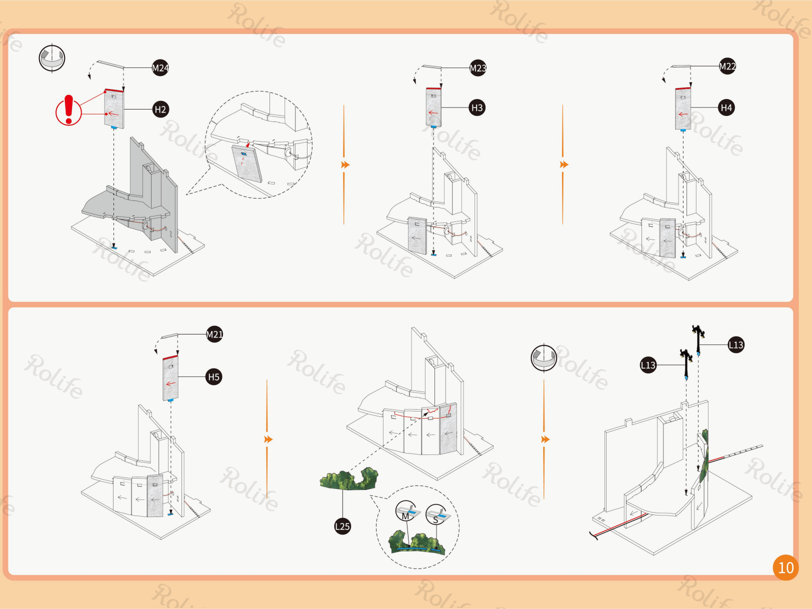
M24
H2
M23
H3
M22
H4
M21
H5
L25
M
L13
L13
10

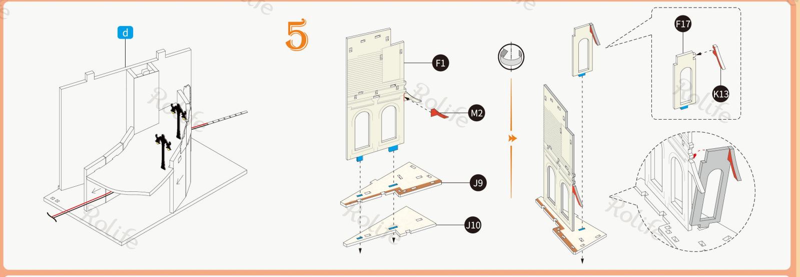
d
5
F1
M2
J9
J10
F17
K13

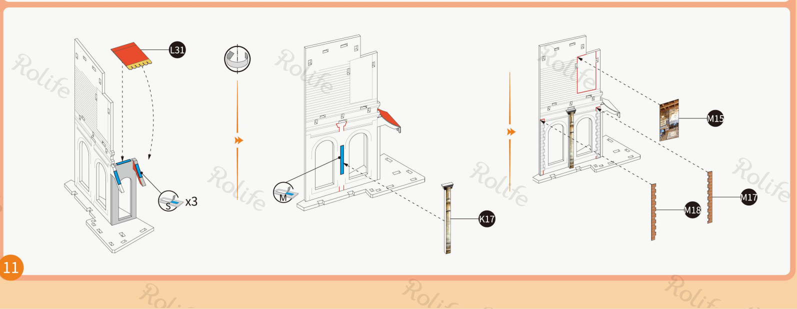
L31
x3
M15
M17
M16
K17

11

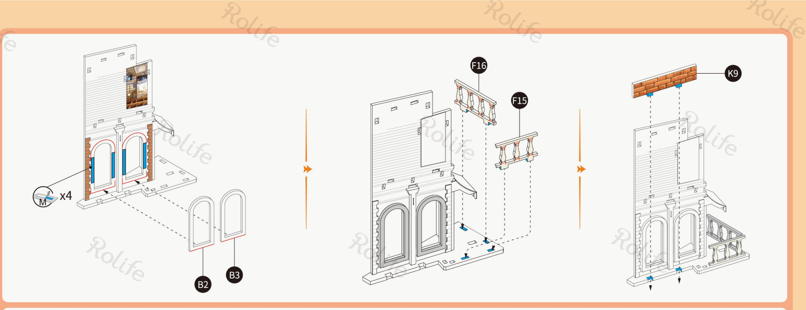
x4
B2
B3
F16
F15
K9

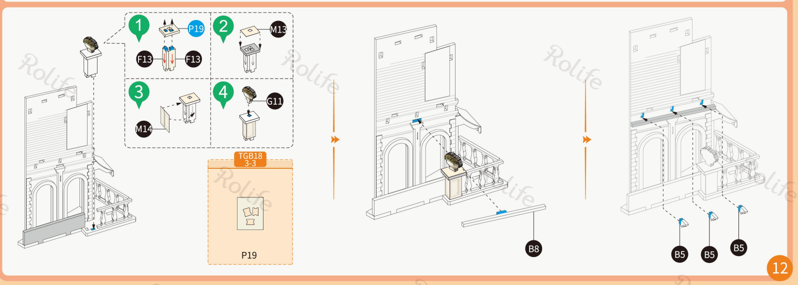
1
P19
F13
F13
2
M13
3
M14
4
G11
TGB18 3-3
P19
B8
B5
B5
B5

12

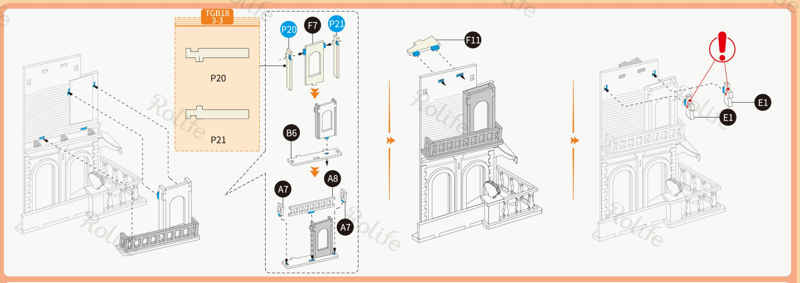
TGB18 3-3
P20
P21
P20
F7
P21
B6
A8
A7
A7
F11
E1
E1

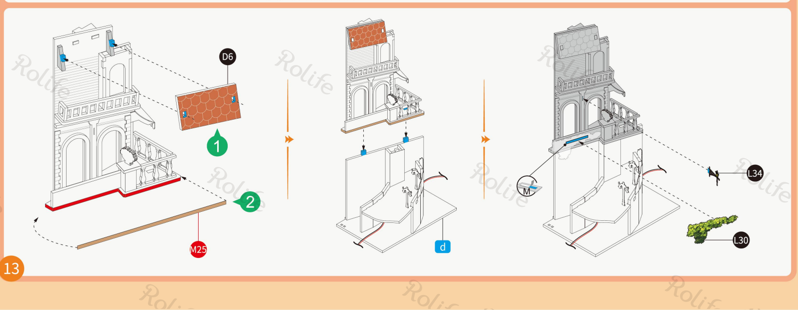
D6
1
2
M25
d
L34
L30

13

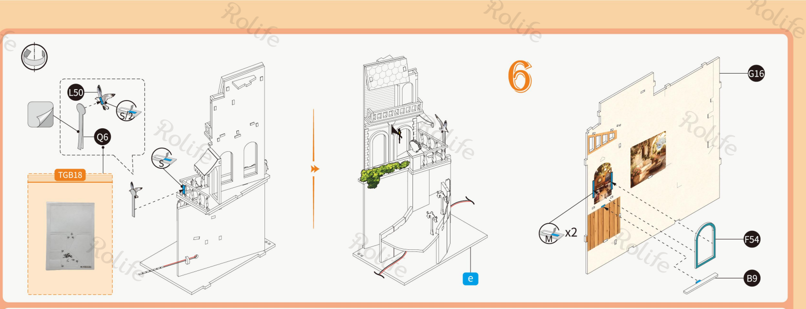
L50
Q6
TGB18
e
6
G16
x2
F54
B9

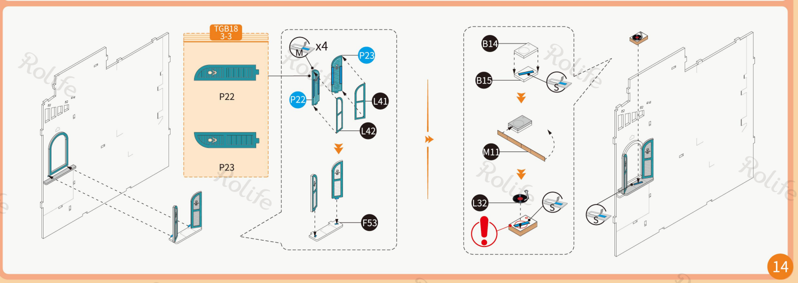
TGB18 3-3
P22
P23
x4
P23
P22
L41
L42
F53
B14
B15
M11
L32

14

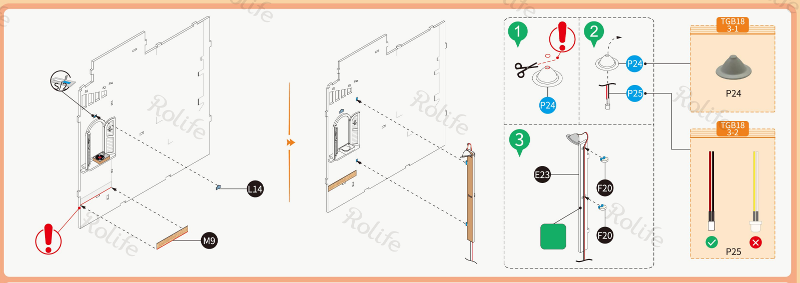
L14
M9
1
P24
2
P26
P25
3
E23
F20
F20
TGB18 3-1
P24
TGB18 3-2
P25

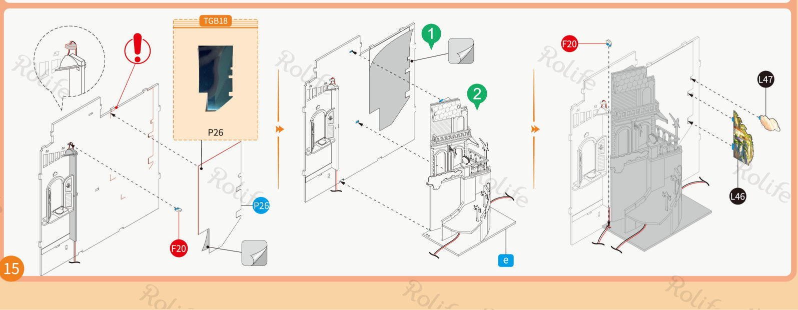
TGB18
P26
P26
F20
1
2
e
F20
L47
L46

15

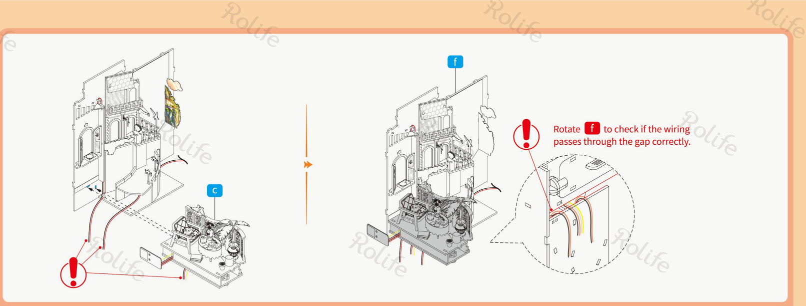

Rotate f to check if the wiring passes through the gap correctly.

Rolife

7

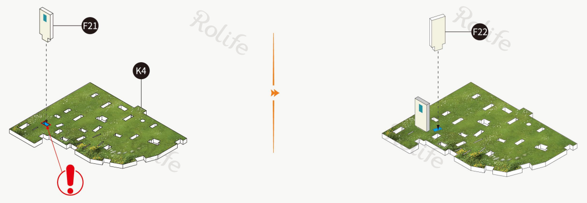

16

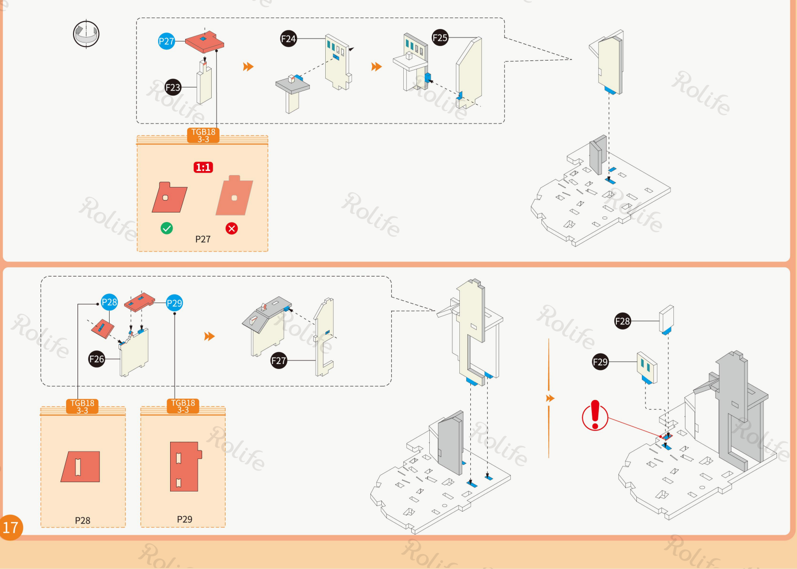
P27
F23
F24
F25
TGB18 3-3
1:1
P27
P28
P29
F26
F27
TGB18 3-3
P28
TGB18 3-3
P29
F28
F29

17

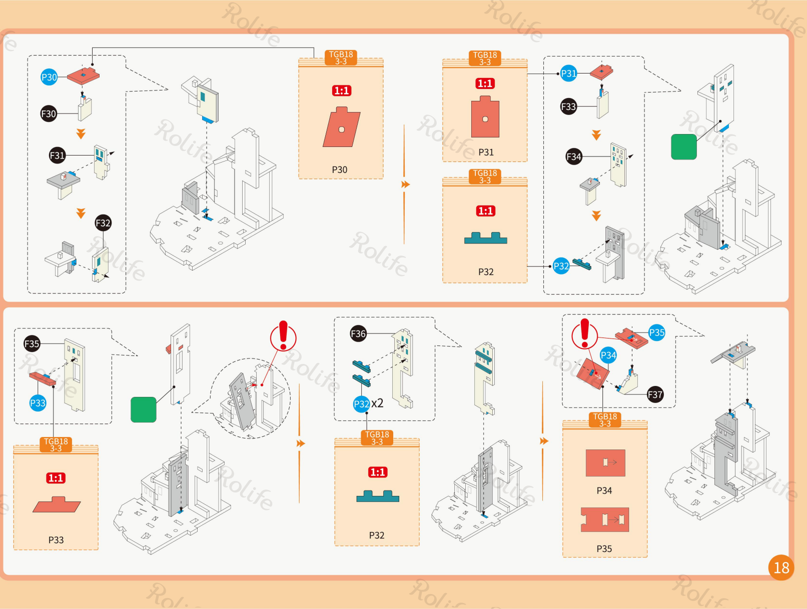
P30
F30
F31
F32
TGB18 3-3
1:1
P30
TGB18 3-3
1:1
P31
TGB18 3-3
1:1
P32
P31
F33
F34
P32
F35
P33
TGB18 3-3
1:1
P33
F36
P32 x2
TGB18 3-3
1:1
P32
P35
P34
F37
TGB18 3-3
P34
P35

18

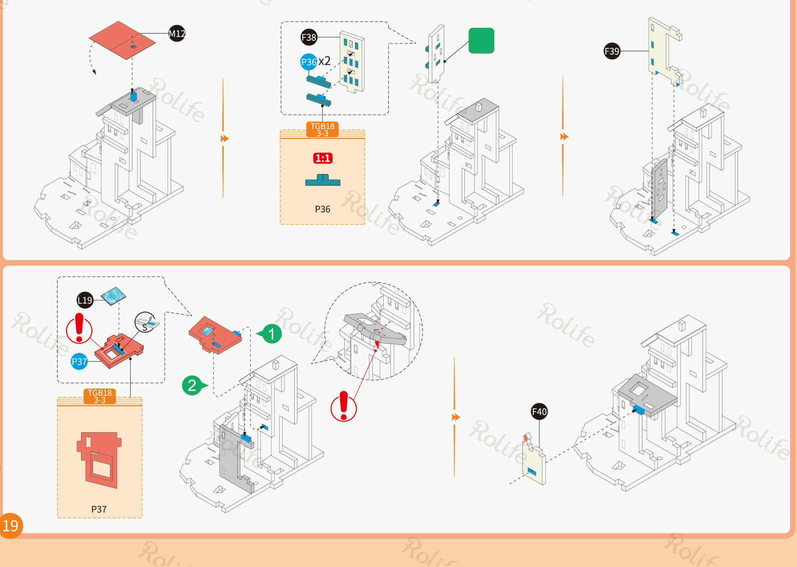
M12
F38
P36 x2
TGB18 3-3
1:1
P36
F39
L19
S
P37
TGB18 3-3
P37
1
2
F40

19

Rolife

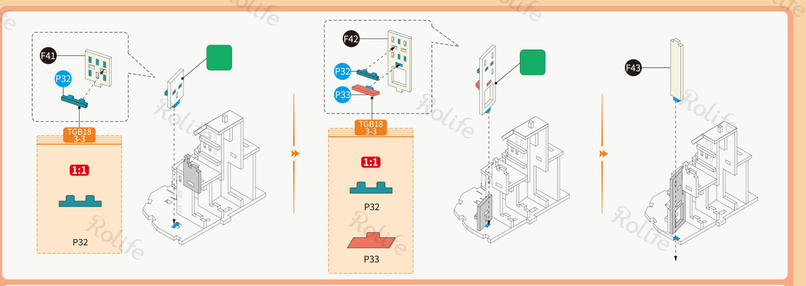
F41
P32
TGB18 3-3
1:1
P32
F42
P32
P33
TGB18 3-3
1:1
P32
P33
F43

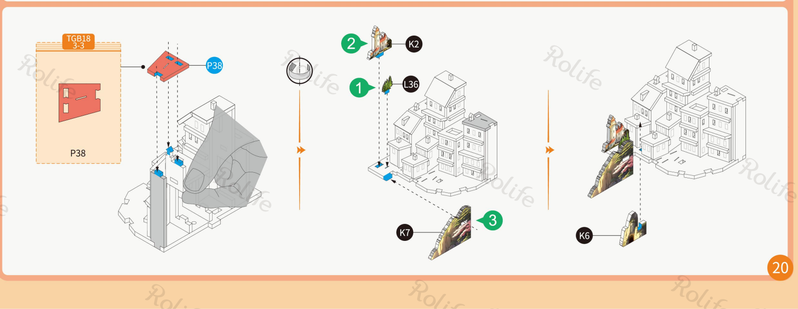
TGB18 3-3
P38
P38
2
K2
1
L36
K7
3
K6

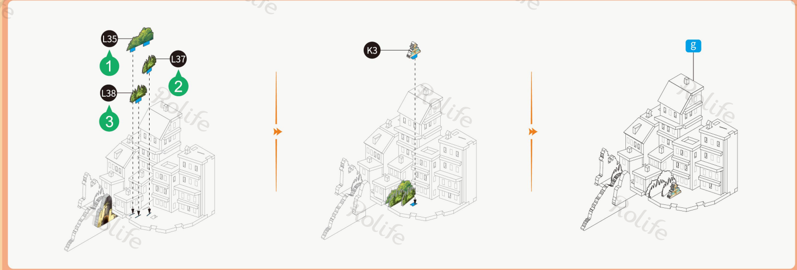
L35
1
L37
2
L38
3
K3
g

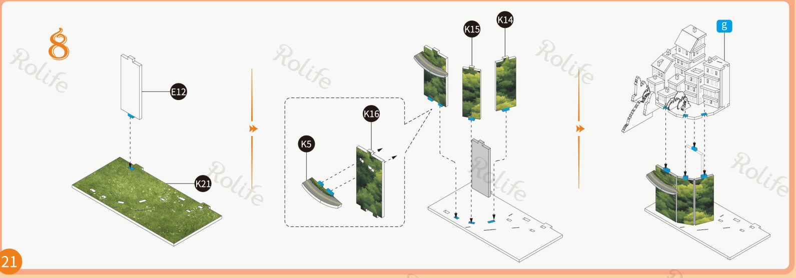
8
E12
K21
K5
K16
K15
K14
g

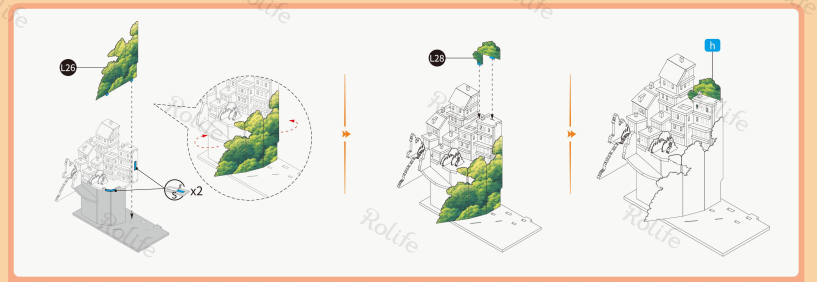

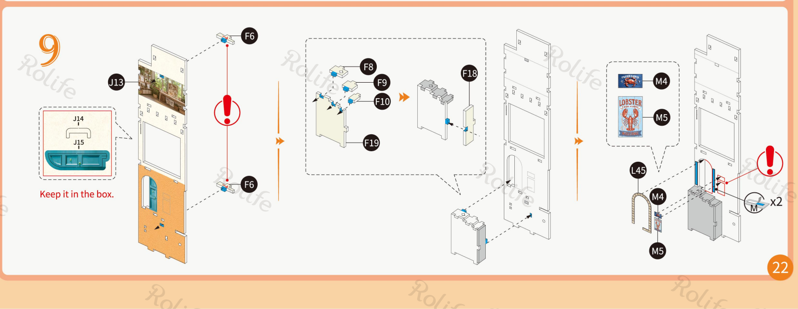
9
J13
J14
J15
Keep it in the box.
F6
F6
F8
F9
F10
F18
F19
M4
M5
L45
M4
M5
M
x2

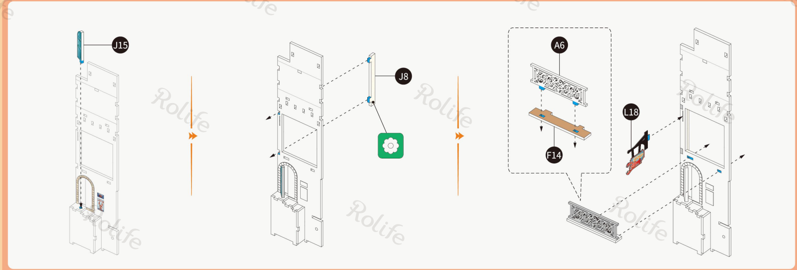
J15
J8
A6
F14
L18

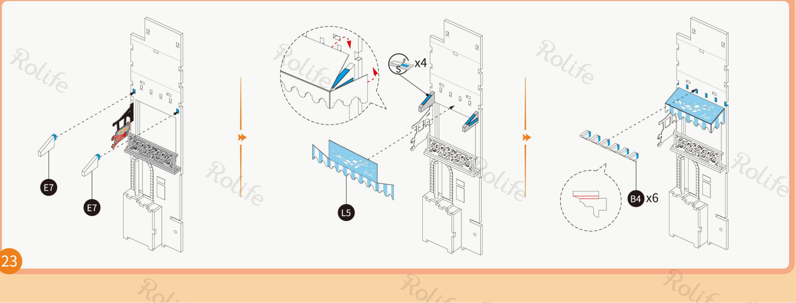
E7
E7
x4
L5
B4
x6

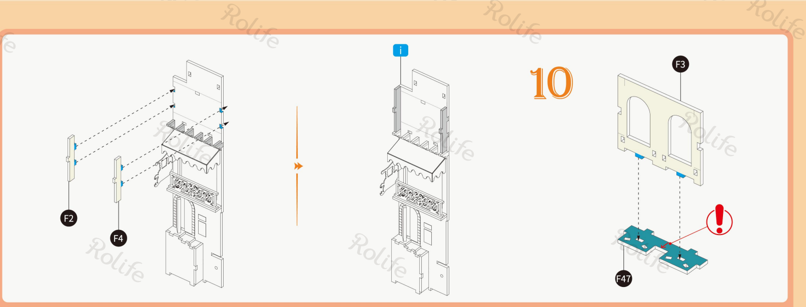
F2
F4
i
10
F3
F47

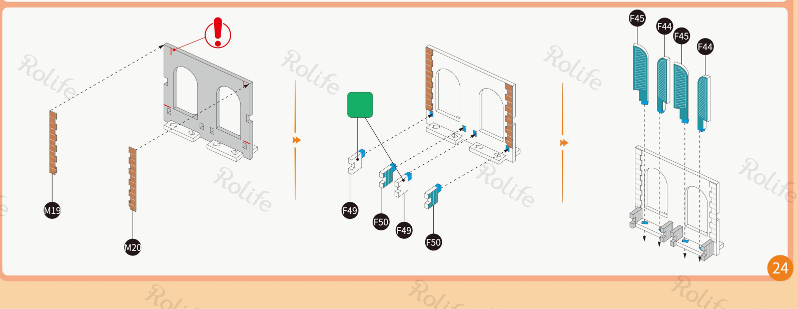
M19
M20
F49
F50
F49
F50
F45
F44
F46
F44

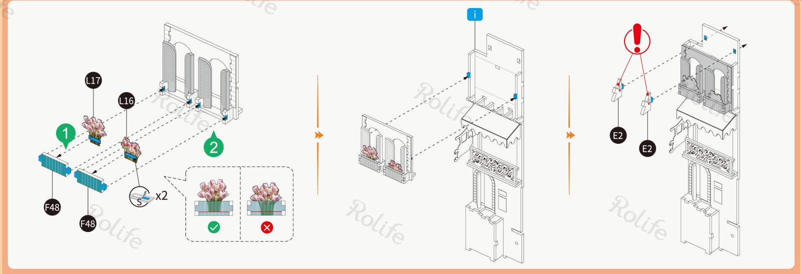
L17
L16
1
2
F48
F48
x2
i
E2
E2

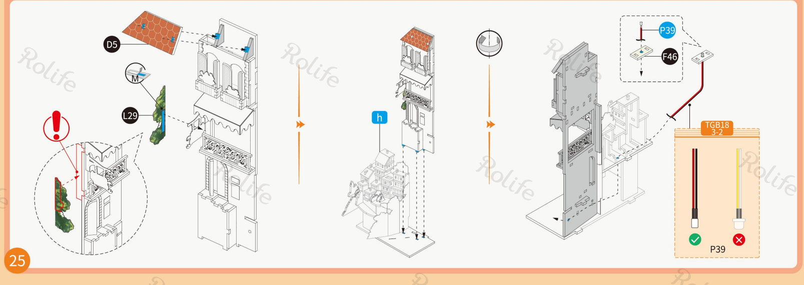
D5
M
L29
h
P39
F46
TGB18
3-2
✓
✗
P39
25

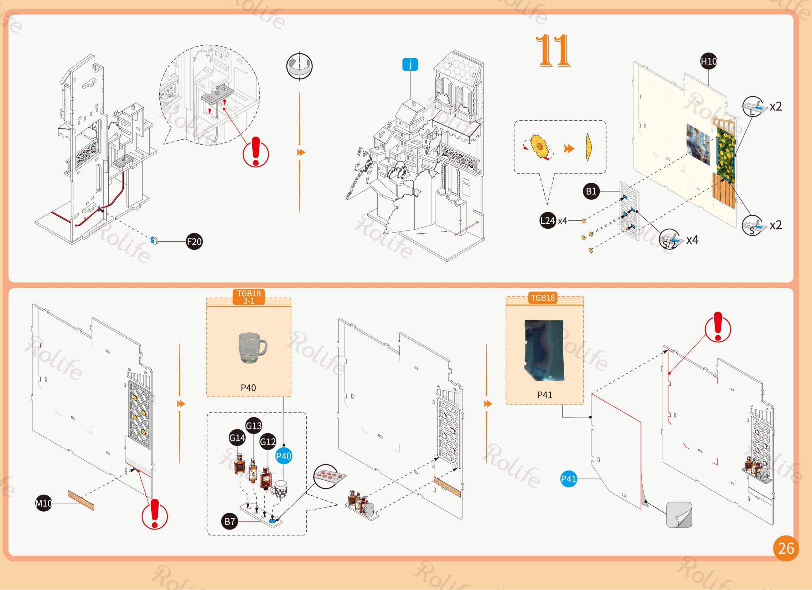
F20
j
11
H10
x2
B1
L24 x4
S/2 x4
L
S
x2
M10
TGB18
3-1
P40
G13
G14
G12
P40
B7
TGB18
P41
P41
26

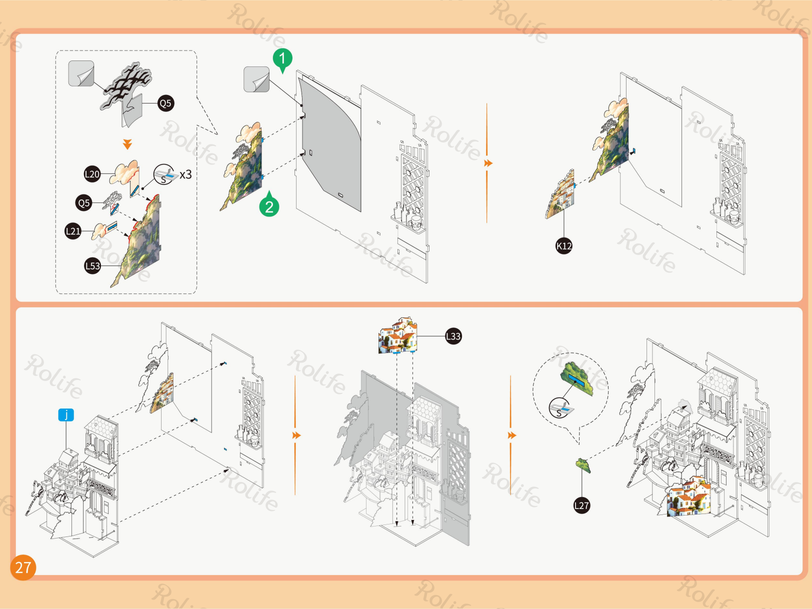
Q5
1
2
L20
S x3
Q5
L21
L53
K12
j
L33
S
L27
27

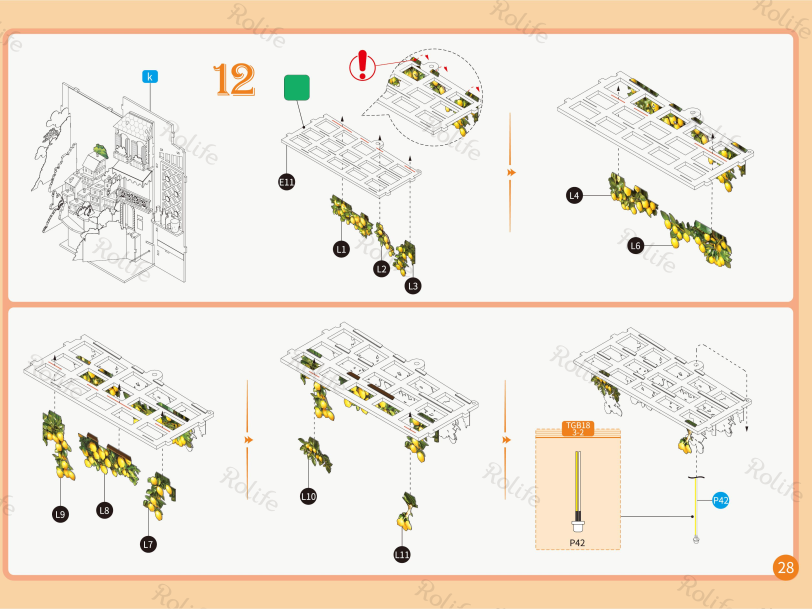
k
12
E11
L1
L2
L3
L4
L6
L9
L8
L7
L10
L11
TGB18
3-2
P42
P42
28

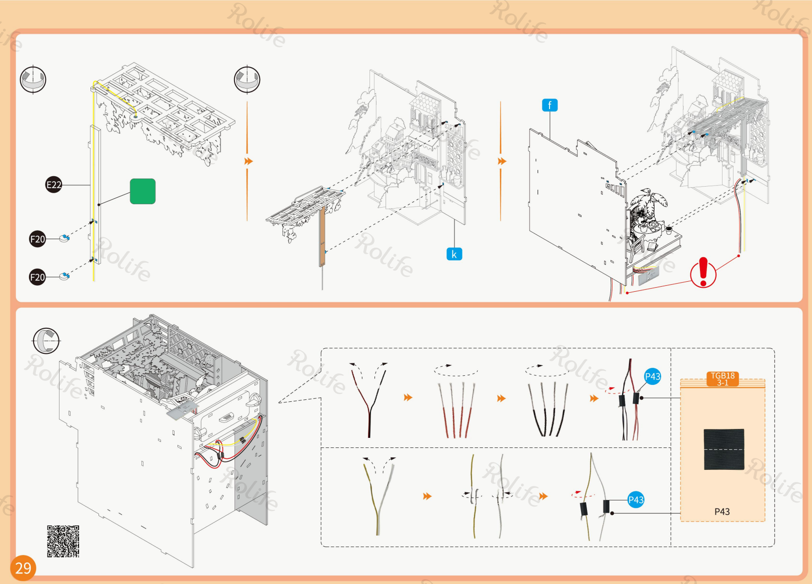
E22
F20
F20
k
f
P43
TGB18
3-1
P43
P43
29

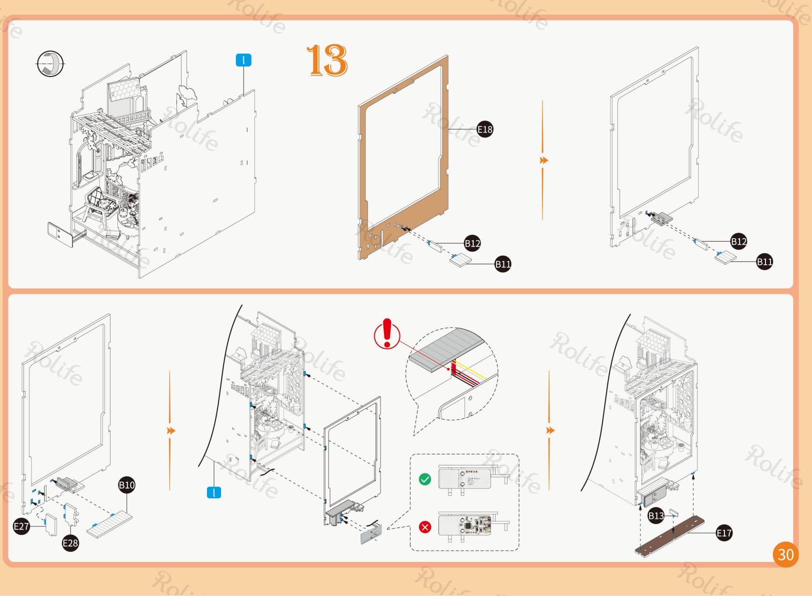
l
13
E18
B12
B11
B12
B11
B10
E27
E28
l
✓
✗
B13
E17
30

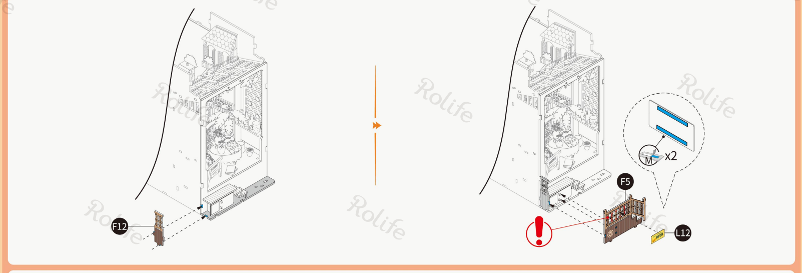
F12
M
x2
F5
L12

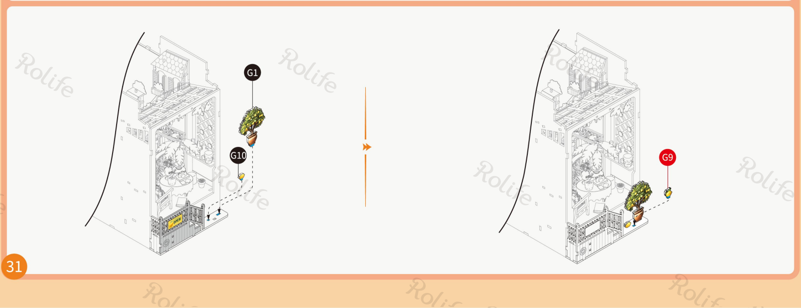

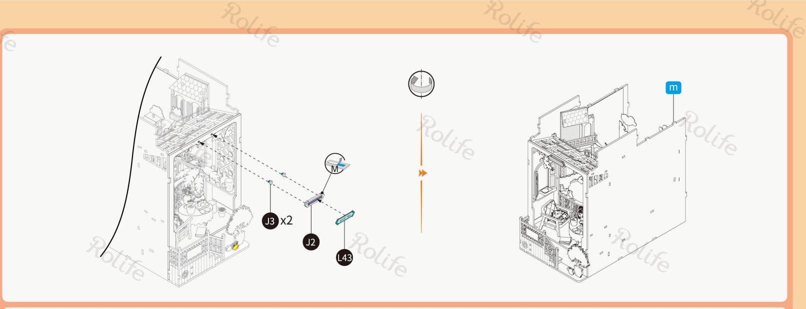
J3 x2
M
J2
L43
m

14

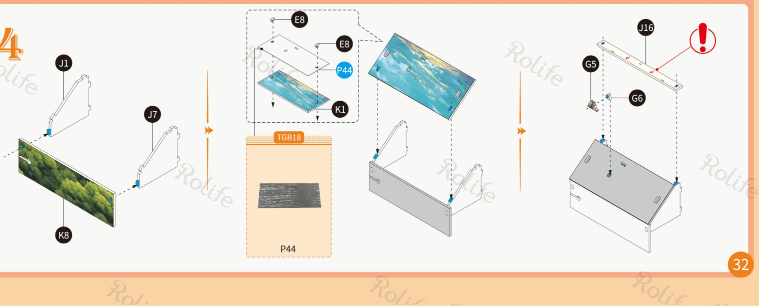
J1
J7
K8
E8
E8
P44
K1
TGB18
P44
J16
G5
G6

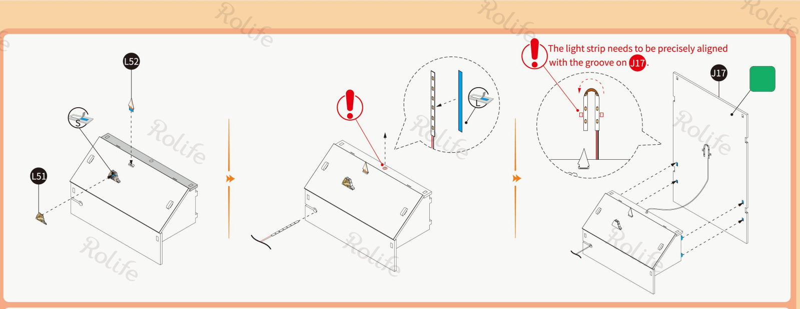

The light strip needs to be precisely aligned with the groove on J17

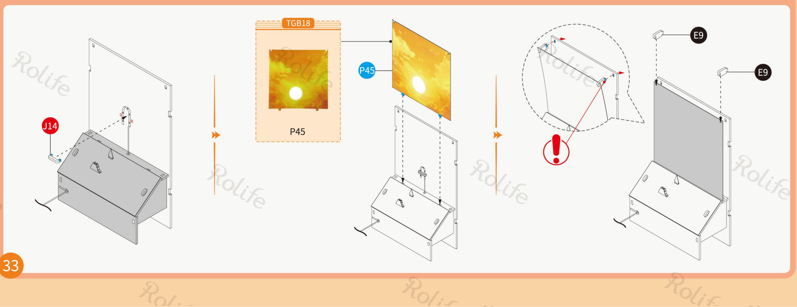
J14
TGB18
P45
P45
E9
E9

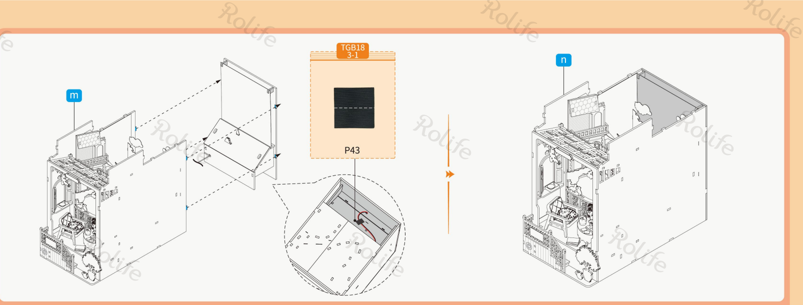
m
TGB18
P43
n

15

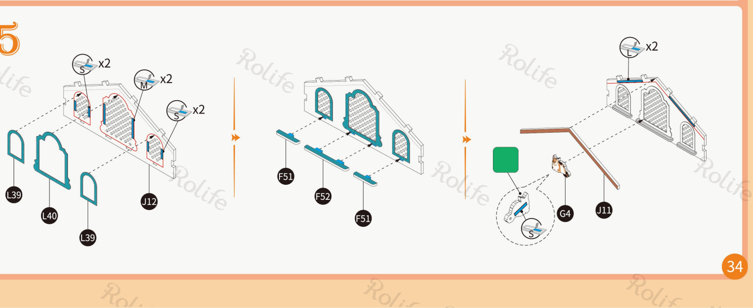
x2
M x2
x2
L39
L40
L39
J12
F51
F52
F51
x2
G4
J11

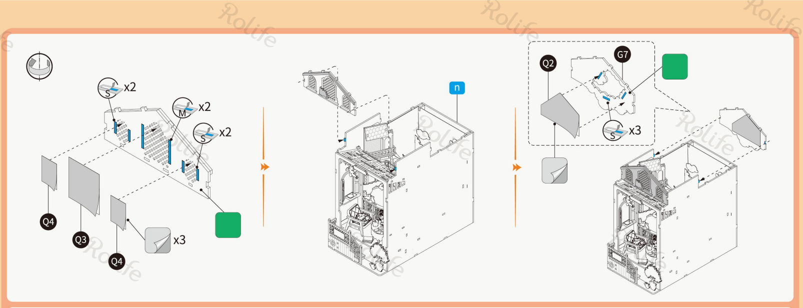
x2
M x2
x2
Q4
Q3
Q4
x3
n
Q2
G7
x3

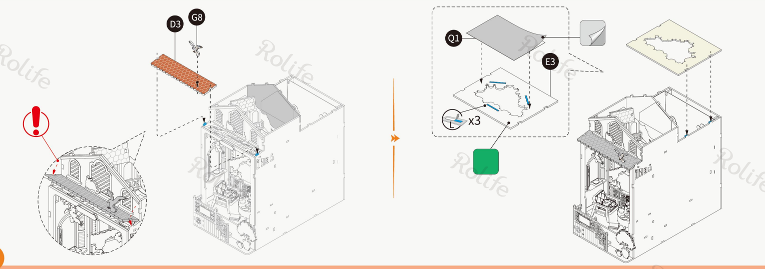
D3
G8
Q1
E3
x3

16

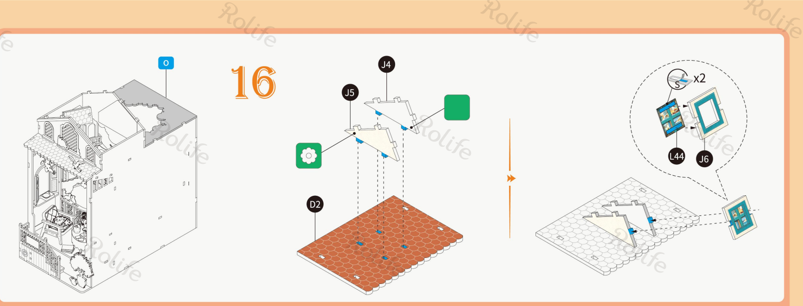
o
J4
J5
D2
x2
L44
J6

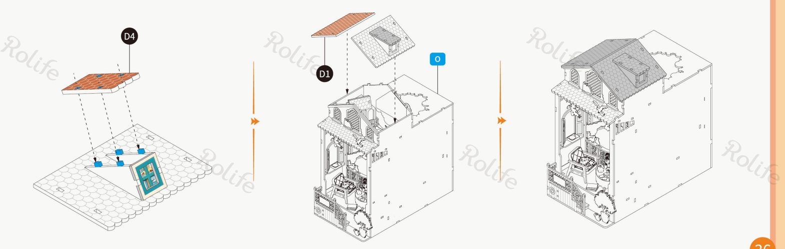

1. Take out the battery box and use **P46** to open the cover.

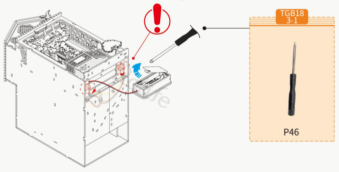
TGB18
3-1
P46

2. Self-prepare 2 "AAA/LR03/AM4 1.5V" batteries.

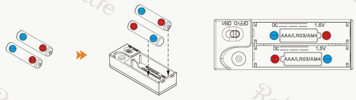
OFF/O ON/I
DC 1.5V
AAA/LR03/AM4
DC 1.5V
AAA/LR03/AM4

3. OFF-ON, reinstall the battery box into the book nook.

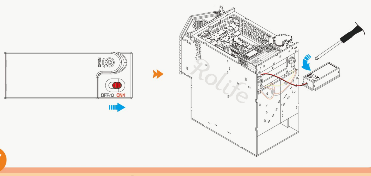
OFF/O
OFF/O ON/I

4. Touch the switch to check if the light beads are working properly.

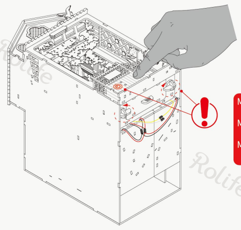

Mode 1: Touch swtich once to turn on all lights.
Mode 2: Touch switch again to turn off ceiling light.
Mode 3: Long press to turn off all lights.

5. Check if the light bead is normal. Insert the connected wires into the slots, complete assembly after assembling **C4** .

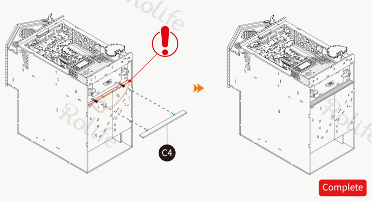
C4
Complete

BOOK NOOK & WONDERLAND | Sunset Isle
• TGB18

ROLIFE Facebook

rolife.robotime.com/

TGB11
Sakura Wine Alley

TGB12
Fall into Wonder

TGB14
Magic Fantasy Corner

TGB15
Holiday Café

TGB16
Library of Wonders

TGB17
Fairytale Amusement Park

Rolife

Designed by ROBOTIME
www.robotime.com
MADE IN CHINA
49.1TGB18.100